RI - Thread reducer/expander

Male BSPP thread – metal sealing edge (ISO 1179) / Female BSPP thread (ISO 1179-1)

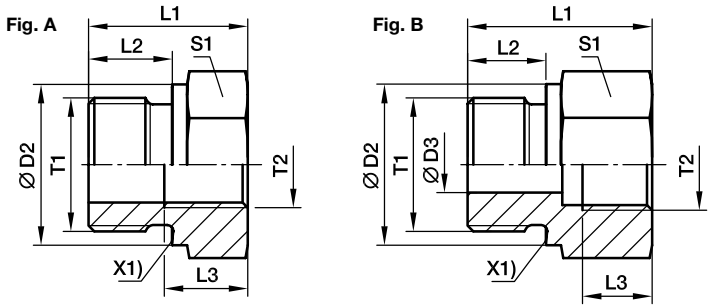

X1) metal sealing edge

Male Stud T1	Female Stud T2	D2	D3	L1	L2	L3	S1	Fig.	Weight g/1 piece	Order code	PN (bar) CF	71	MS
G 1/8 A	**G 1/4**	14	4	31.0	8	12.0	19	B	42	**RI1/8X1/4**	400	400	250
G 1/8 A	**G 3/8**	14	4	32.0	8	12.0	24	B	63	**RI1/8X3/8**	400	400	250
G 1/4 A	**G 1/8**	18	5	28.0	12	8.0	19	B	38	**RI1/4X1/8**	400	400	250
G 1/4 A	**G 3/8**	18	5	36.0	12	12.0	24	B	69	**RI1/4X3/8**	400	400	250
G 1/4A	**G 1/2**	18	5	40.0	12	14.0	30	B	116	**RI1/4X1/2**	400	400	250
G 1/4 A	**G 3/4**	18	5	43.0	12	16.0	36	B	170	**RI1/4X3/4**	315	315	200
G 3/8 A	**G 1/8**	22		22.5	12	8.0	22	A	39	**RI3/8X1/8**	400	400	250
G 3/8 A	**G 1/4**	22	8	36.0	12	12.0	22	B	68	**RI3/8X1/4**	400	400	250
G 3/8 A	**G 1/2**	22	8	41.0	12	14.0	30	B	125	**RI3/8X1/2**	400	400	250
G 3/8 A	**G 3/4**	22	8	44.0	12	16.0	36	B	183	**RI3/8X3/4**	315	315	200
G 1/2 A	**G 1/8**	26		24.0	14	8.0	27	A	66	**RI1/2X1/8**	400	400	250
G 1/2 A	**G 1/4**	26		24.0	14	12.0	27	A	56	**RI1/2X1/4**	315	315	200
G 1/2 A	**G 3/8**	26	12	37.0	14	12.0	27	B	94	**RI1/2X3/8**	315	315	200
G 1/2 A	**G 3/4**	26	12	46.0	14	16.0	36	B	182	**RI1/2X3/4**	315	315	200
G 1/2 A	**G 1**	26	12	49.0	14	18.0	41	B	221	**RI1/2X1**	315	315	200
G 1/2 A	**G 1 1/4**	26	10	53.0	14	20.0	55	B	482	**RI1/2X11/4**	160	160	
G 3/4 A	**G 1/4**	32		26.0	16	12.0	32	A	103	**RI3/4X1/4**	315	315	200
G 3/4 A	**G 3/8**	32		26.0	16	12.0	32	A	87	**RI3/4X3/8**	315	315	200
G 3/4 A	**G 1/2**	32	16	40.0	16	14.0	32	B	143	**RI3/4X1/2**	315	315	200
G 3/4 A	**G 1**	32	16	51.0	16	18.0	41	B	235	**RI3/4X1**	315	315	200
G 3/4 A	**G 1 1/4**	32	16	55.0	16	20.0	55	B	481	**RI3/4X11/4**	160	160	
G 3/4 A	**G 1 1/2**	32	16	57.0	16	22.0	60	B	560	**RI3/4X11/2**	160	160	
G 1 A	**G 1/4**	39		29.0	18	12.0	41	A	195	**RI1X1/4**	315	315	
G 1 A	**G 3/8**	39		29.0	18	12.0	41	A	179	**RI1X3/8**	315	315	200
G 1 A	**G 1/2**	39		29.0	18	14.0	41	A	157	**RI1X1/2**	315	315	200
G 1 A	**G 3/4**	39	20	47.0	18	16.0	41	B	278	**RI1X3/4**	315	315	200
G 1 A	**G 1 1/4**	39	20	57.0	18	20.0	55	B	530	**RI1X11/4**	160	160	100
G 1 A	**G 1 1/2**	39	20	59.0	18	22.0	60	B	585	**RI1X11/2**	160	160	100
G 1 1/4 A	**G 1/2**	49		32.0	20	14.0	50	A	308	**RI11/4X1/2**	160	160	100
G 1 1/4 A	**G 3/4**	49		32.0	20	16.0	50	A	267	**RI11/4X3/4**	160	160	100
G 1 1/4 A	**G 1**	49	25	52.0	20	18.0	50	B	458	**RI11/4X1**	160	160	100
G 1 1/4 A	**G 1 1/2**	49	25	60.0	20	22.0	60	B	616	**RI11/4X11/2**	160	160	100
G 1 1/2 A	**G 1/2**	55		36.0	22	14.0	55	A	477	**RI11/2X1/2**	160	160	100
G 1 1/2 A	**G 3/4**	55		36.0	22	16.0	55	A	402	**RI11/2X3/4**	160	160	100
G 1 1/2 A	**G 1**	55		36.0	22	18.0	55	A	337	**RI11/2X1**	160	160	100
G 1 1/2 A	**G 1 1/4**	55	32	58.0	22	20.0	55	B	542	**RI11/2X11/4**	160	160	100
G 2 A	**G 1 1/2**	68	40	62.0	24	22.0	70	B	990	**RI2X11/2**	160		

Order code suffixes			
	Stainless Steel	Brass	
Suffix	71	MS	
Example	RI1X3/471	RI1X3/4MS	

© Geeve Hydraulics | DIN fittings Catalog